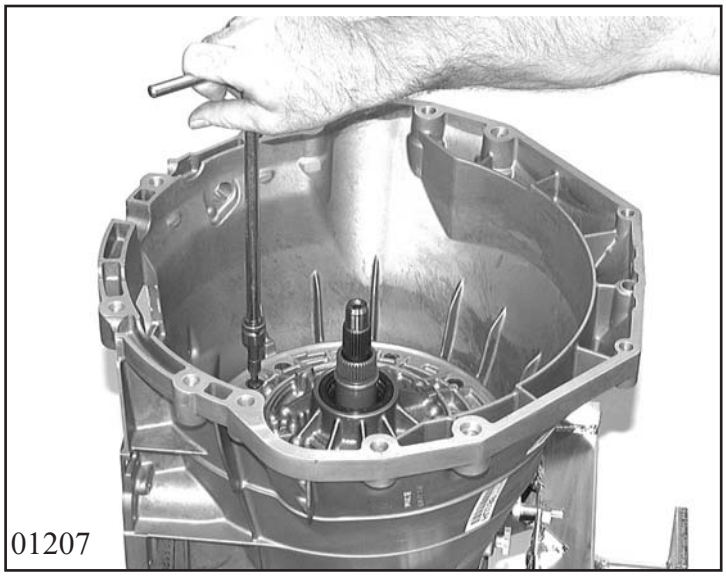
01207

Turn transmission by 90°. Completely remove oil supply unit. To do this, loosen 14 Torx screws and remove with Usit rings.

(Wrench size = Torx - TX 27)

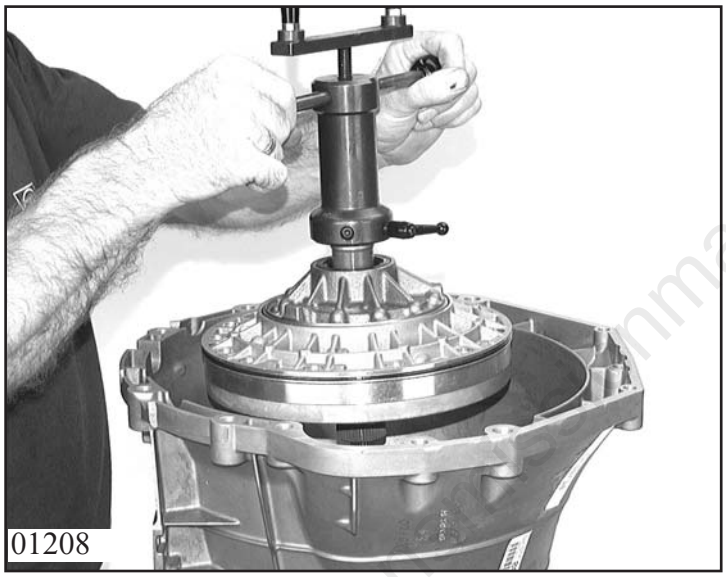
01208

Press out the oil supply unit with jack 5x46 000 563 and lift off.

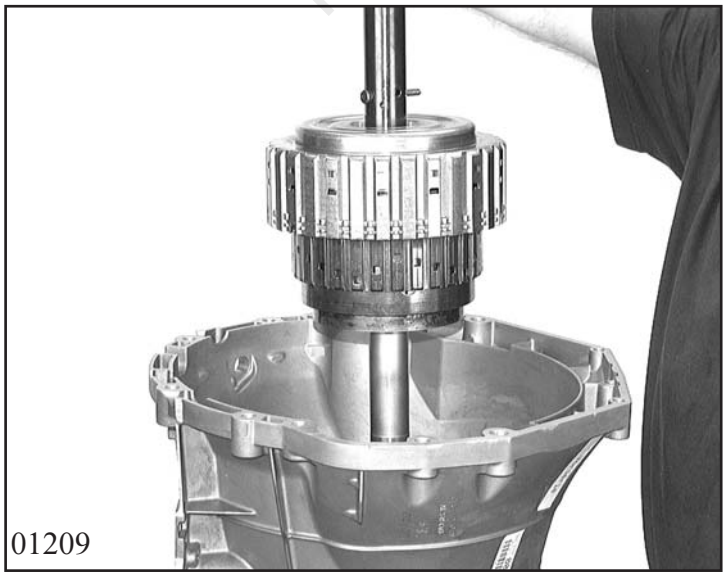
01209

Take out the shim washer.
Remove turret (input with clutches A and E).
To do this, lock lifting device 5x46 002 563 in the input shaft with 5 mm mandrel. Take out the complete unit by hand.
Insert turret into fixture 5x46 000 917 and remove the fixture.

Remove axial needle roller bearing cage from hub of cylinder B.

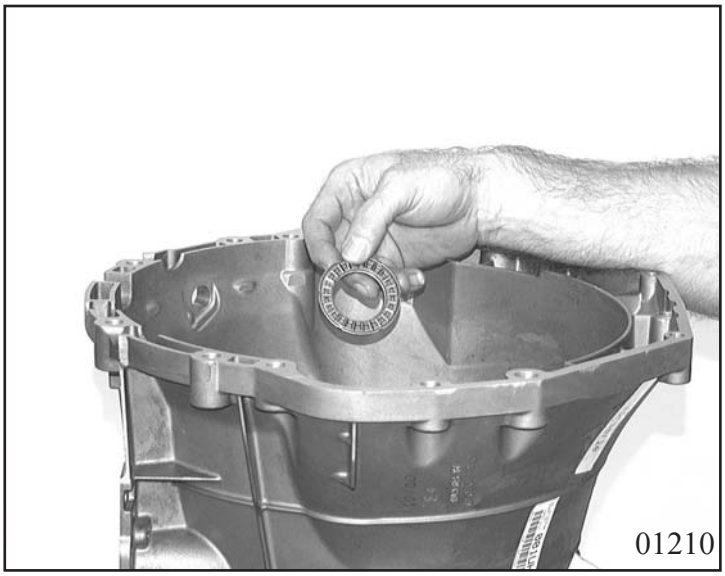

Warning!
The second angled thrust washer is located in the hub of internal disk carrier B and could be loosened during cleaning.

Risk of loss!

Remove clutch B manually.

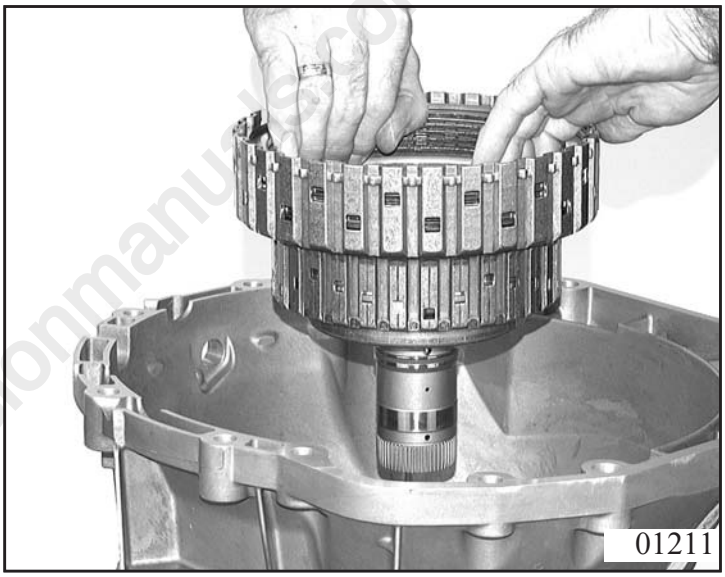

Turn transmission by 90° and loosen the 12-sided nut with wrench 5x46 002 456.
Pull off the output flange.
If present remove the reversing disk.

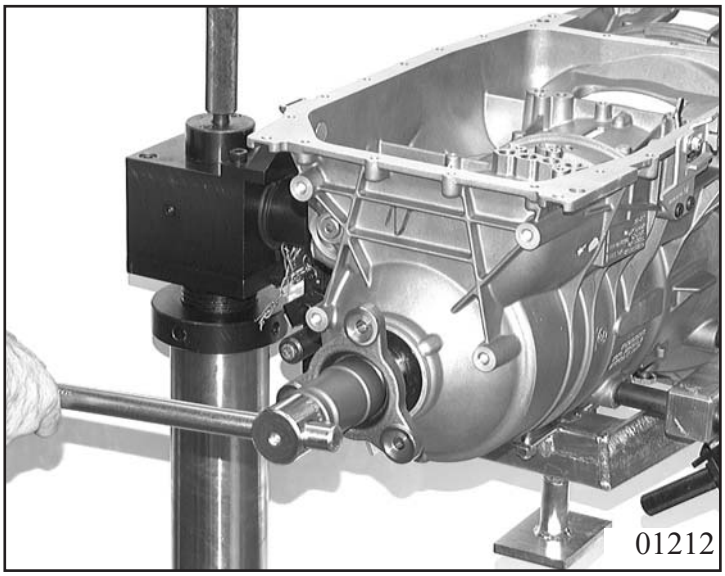

Transmissionmanuals.com

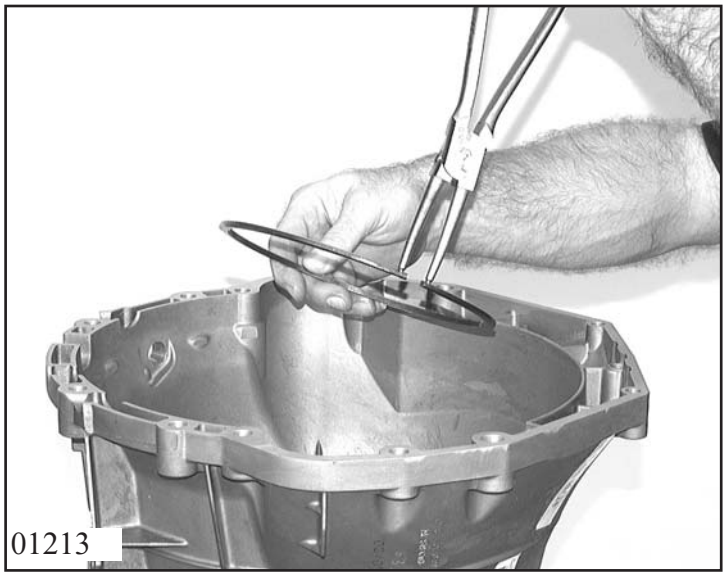

Turn transmission by 90° and lever snap ring out of casing with a screwdriver or take it out with snap ring pliers.
Lift off clutch C.

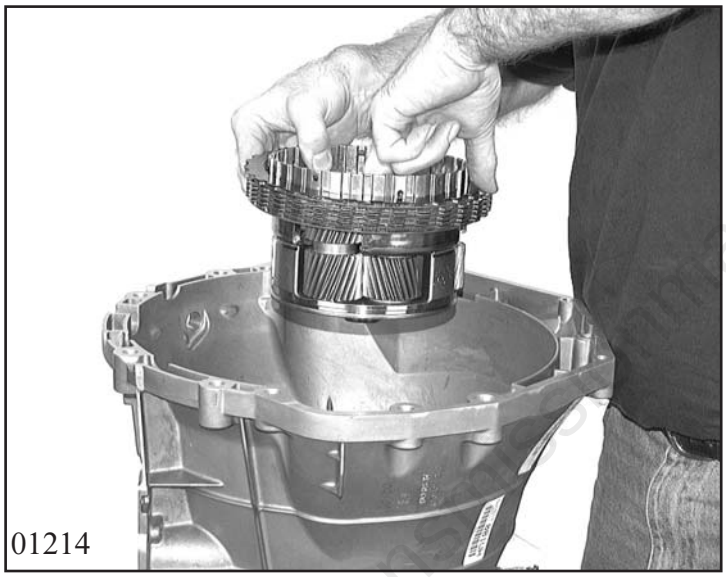

Take out the angle plate and sun gear.
Remove planet carrier with complete clutch pack D.
Remove final disk from transmission casing.
Remove complete clutch pack D from planet carrier.

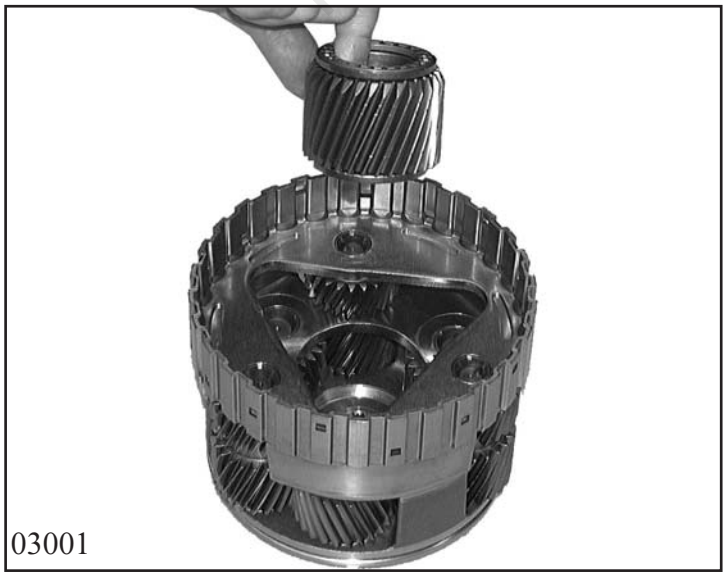

Remove thrust plates and sun gears 2 + 3 from planet carrier.
Lift clip bearings from planet carrier and sun gear 3.

Lift thrust washer off planet carrier hub.
Take out ring gear with output shaft.
Remove output axial clearance adjusting disk.

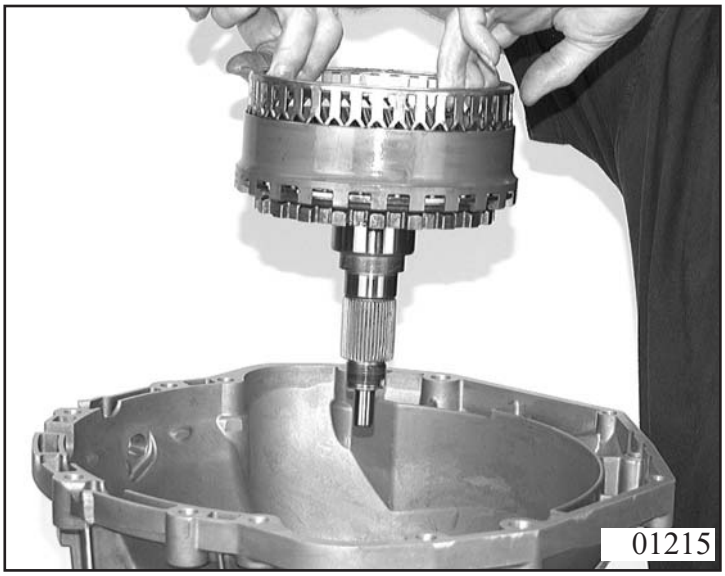

Transmissionmanuals.com